OMCO Serving the glass world

'OMCO' ALL RIGHTS RESERVED.
NO PART MAY BE REPRODUCED OR USED TO MANUFACTURE
THE ARTICLE DEPICTED WITHOUT WRITTEN PERMISSION.

REVISIONS

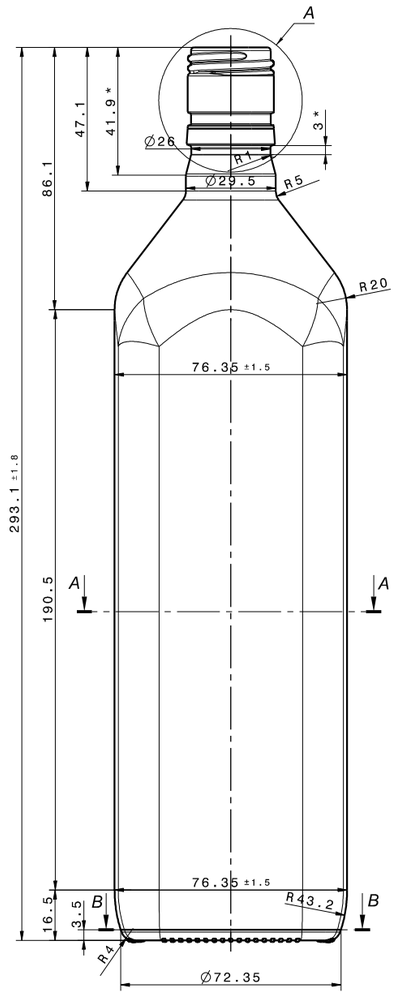

Front view
Scale: 1:1

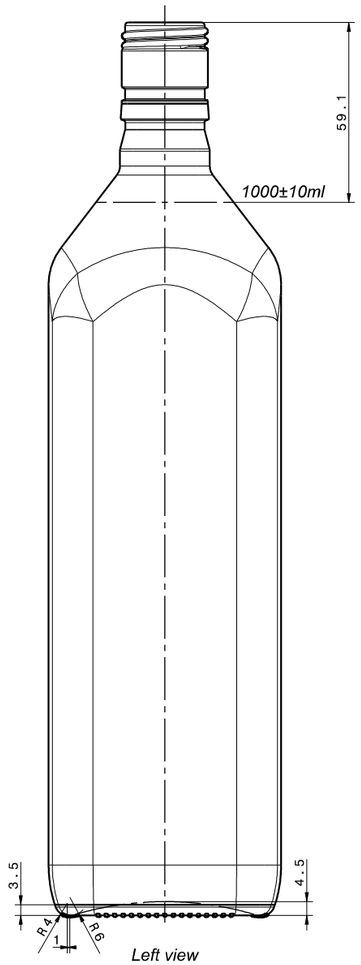

Left view
Scale: 1:1

View through parting line

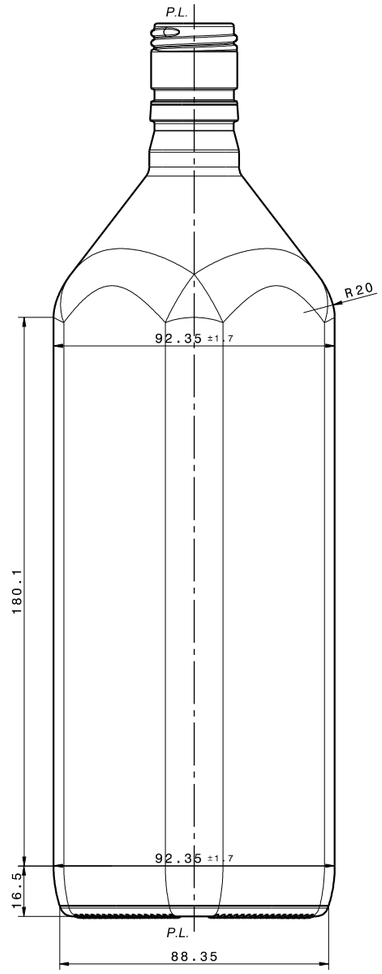

Finish type: AC 305

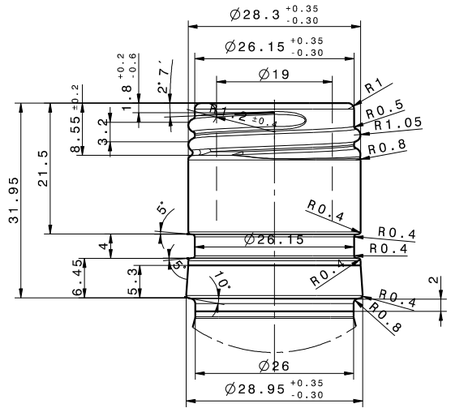

Detail A
Scale: 2:1

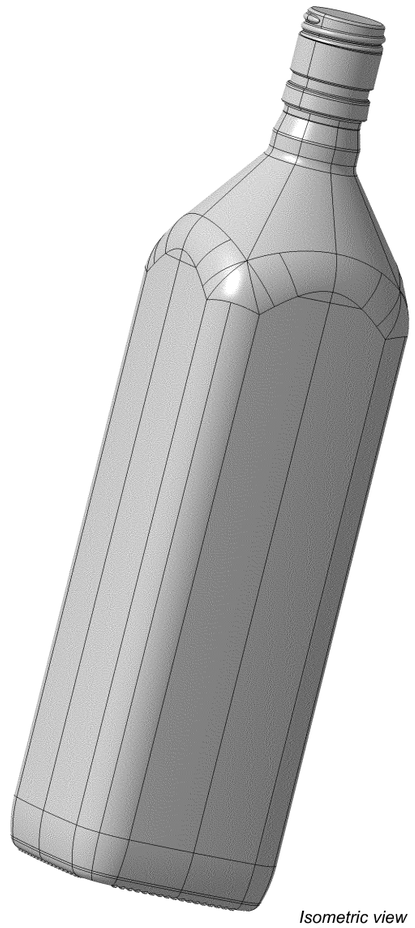

Isometric view
Scale: 1:1

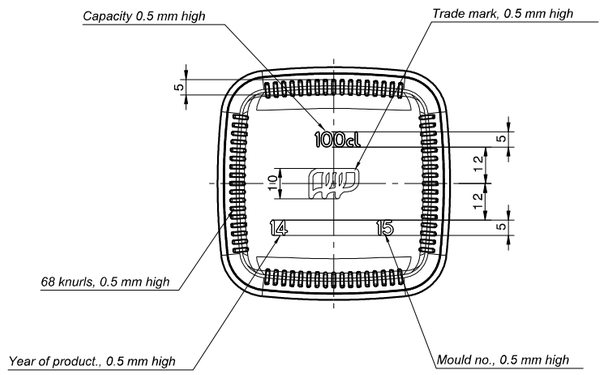

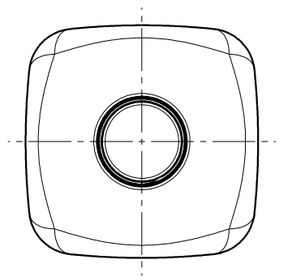

Top view
Scale: 1:1

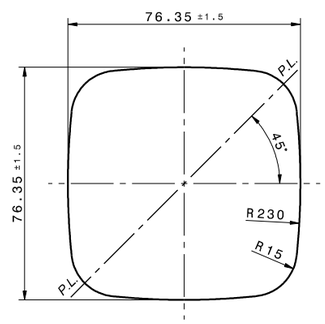

Section cut A-A
Scale: 1:1

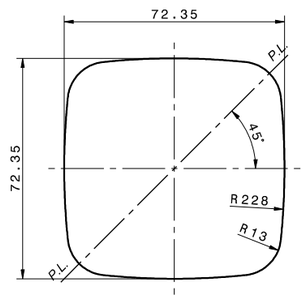

Section cut B-B
Scale: 1:1

Tip angle - 15.8°

*-Construction dimension

CAPACITY LEVEL FULL		WEIGHT	DESIGNER	DATE	FINISH #1	WALL	NOTE : DO NOT SCALE
1023	ML	555 GRM	Krklec I.	07.01.14.	AC 305	3.5mm	1 DIMENSIONS SHOW GLASS SIZES, UNTOLERANCED DIMENSIONS ARE NOT SUBJECT TO SPECIFIED LIMITS
CAPACITY AT FILL LINE		GLASS COLOUR	Job. No.	K00309			2 FILLING POINT MEASURED FROM TOP CENTRALLY INSIDE.
1000±10	ML	FLINT					3 CAPACITY TOLERANCE APPLIES TO BULK TEST MEAN OF 12.
FILL LINE	59 FROM TOP	REF. No.	TITLE	SQUARE BOTTLE 1000ml			DRG.No. K00309-SPE-01-4
VACUITY	2.2%						